PTFE Bellows,GAB HX Type (for Block Nozzles, ASME)

Works Standard

Main Dimensions and Characteristics

NPS	Neutral Length [mm]	Effective Area [cm²]	Flange Connection D1 [mm]	LK1 [mm]	d1 [mm]	D2 [mm]	LK2 [mm]	d2 [inch]
1	69	10	110	79,4	4xØ16	110	79,4	4x1/2“ UNC
1 1/2	69	22	125	98,4	4xØ19	125	98,4	4x1/2“ UNC
2	70	32	150	120,7	4xØ19	150	120,7	4x5/8“ UNC
2 1/2	85	52	180	139,7	4xØ19	180	139,7	4x5/8“ UNC
3	85	73	190	152,4	8xØ19	190	152,4	4x5/8“ UNC
4	91	101	230	190,5	8xØ19	230	190,5	8x5/8“ UNC
5	99	152	255	215,9	8xØ19	255	215,9	8x3/4“ UNC
6	103	207	280	241,3	8xØ22,2	280	241,3	8x3/4“ UNC
8	103	353	345	295,5	8xØ22,2	345	298,5	8x3/4“ UNC
10	107	566	405	362	12xØ22,2	405	362	12x7/8“ UNC
12	132	782	485	431,8	12xØ22,2	485	431,8	12x7/8“ UNC

NPS	Max. Vacuum Allowance [up to ..°C]	Movements Length min./max. [mm]	Lateral max. [mm]	Angular max. [Grad]	Spring Rate (at 20°C+/- 30%) Axial Compress. [N/mm]	Axial Extension [N/mm]	Lateral [N/mm]	Angular [Nm/deg]
1	200	+/- 10	4	8	60	36	72	1
1 1/2	200	+/- 10	4	8	96	60	128	2
2	200	+/- 10	7	9	102	70	150	3
2 1/2	200	+/- 10	7	8	126	96	195	4
3	200	+/- 13	9	9	172	112	240	5
4	200	+/- 15	10	8	268	166	300	7
5	200	+/- 15	10	7	294	192	375	9
6	200	+/- 16	10	6	330	204	450	11
8	200	+/- 18	10	6	260	200	590	12
10	100 [1])	+/- 20	10	5	280	220	560	17
12	100 [2])	+/- 20	11	4	340	250	680	25

[1]) at 150°C/200°C: -0,85 bar/-0,72 bar, [2]) at 150°C/200°C: -0,75 bar/-0,64 bar

Flange connection according to ASME B16.5-2013 Class 150

Combined Movements

- The max. movements (axial, lateral, angular) indicated in the tables are not independent movements. Avoid flexural stresses!
- The combined total of related movements must not exceed 100%.

Length Limitation

- Limit bolts / sleeves should not be used to connect GAB HX PTFE bellows to GAB Neumann heat exchangers.
- During pressure application and / or mechanical movement the extension must not exceed the max. allowed extension (as per data above).
- Please ensure that the heat exchanger and piping are adequately fastened to their bearing.

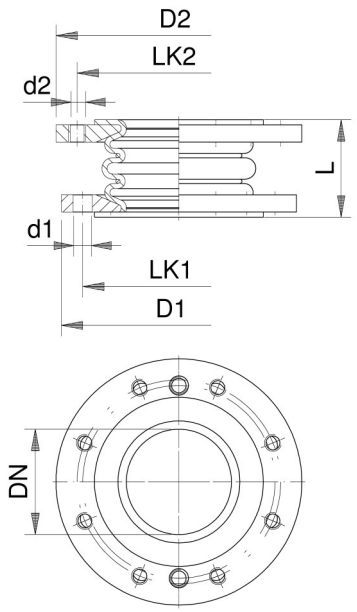

Spring Rate Correction Factors

Temperature [°C]	Factor
20	1,0
80	0,65
120	0,5
150	0,4

Examples:

- Spring rate at 120°C = spring rate at 20°C x 0,5
- Axial extension at NPS 2 and 120°C by 5 mm: Force F = 5 mm x 70 N/mm x 0,5 = 175 N

Materials

Bellow: virgin paste extruded PTFE, black, anti-static (max. electrical resistance <10^8 Ohm)

Flange: SA 516 (1.0425), alternative 316 L (1.4404)

Ultra high temperature paint with a silver finish

GAB Neumann GmbH | Alemannenstrasse 29 | D-79689 Maulburg
T +49 (7622) 6751 0 | F +49 (7622) 6751 20 | info@gab-neumann.de

Graphite and SiC Heat Exchangers and Process Equipment

PTFE Bellows,GAB HX Type (for Block Nozzles, ASME)

Pressure / Temperature Chart

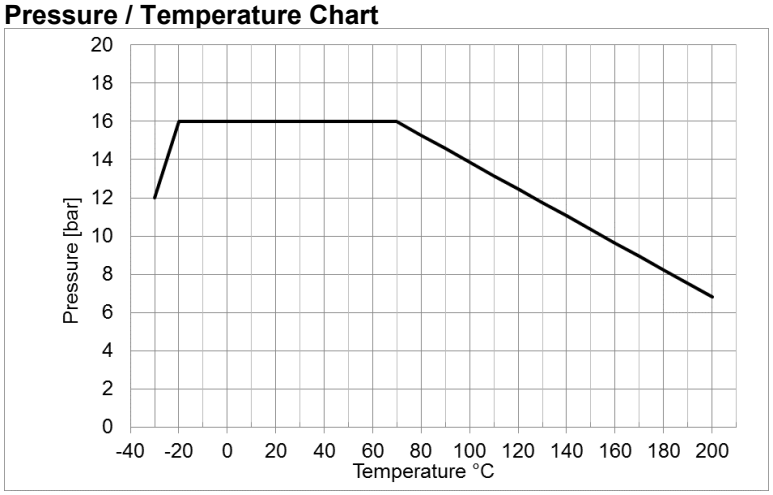

Nominal Diameter

- 1“
- 1 1/2“
- 2“

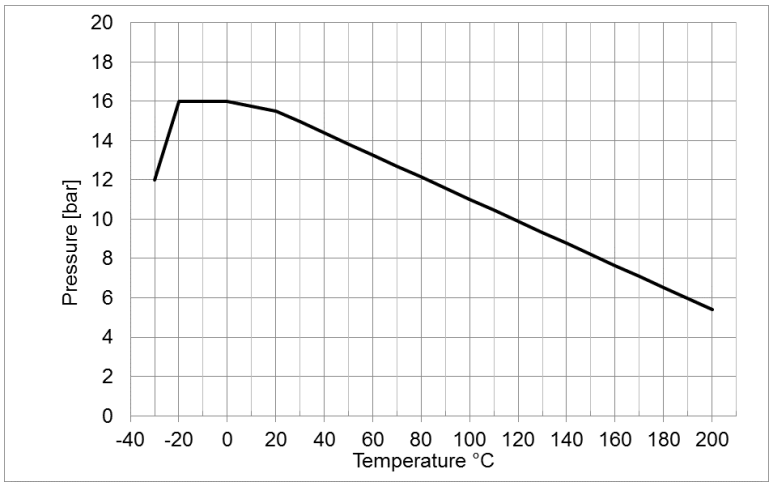

Nominal Diameter

- 2 1/2“
- 3“
- 4“
- 5“
- 6“

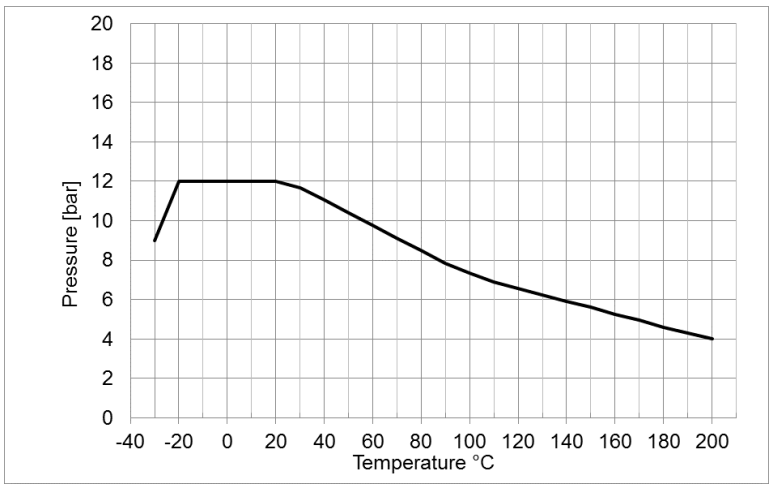

Nominal Diameter

- 8“
- 10“
- 12“

Additional Information

- For further details on GAB HX PTFE bellows can please refer to Technical Information TI 070 on our website: www.gab-neumann.com

GAB Neumann GmbH | Alemannenstrasse 29 | D-79689 Maulburg
T +49 (7622) 6751 0 | F +49 (7622) 6751 20 | info@gab-neumann.de

Graphite and SiC Heat Exchangers and Process Equipment