WS 1090

Stainless Steel Bellows with PTFE-lining (for projecting nozzles, DIN)

Works Standard

Main Dimensions and Characteristics

DN	Neutral Length [mm]	Effective Area [cm²]	Flange Connection D1 [mm]	LK1 [mm]	d1 [mm]	D2 [mm]	LK2 [mm]	d2 [mm]
40	130	28	165	125	4xØ18	150	110	4xØ18
50	125	42	185	145	8xØ18	165	125	4xØ18
65	135	59	200	160	8xØ18	185	145	8xØ18
80	130	85	220	180	8xØ18	200	160	8xØ18
100	160	138	250	210	8xØ18	220	180	8xØ18
125	175	201	285	240	8xØ22	250	210	8xØ18
150	165	280	340	295	8xØ22	285	240	8xØ22
200	179	448	395	350	12xØ22	340	295	8xØ22
250	200	677,5	445	400	12xØ22	395	350	12xØ22
300	210	939	505	460	16xØ22	445	400	12xØ22

DN	Full Vacuum Performance [at 180°C]	Movements Length max. [mm]	Lateral max. [mm]	Angular max. [degree]	Spring Rate (+/- 30% at 20°C) Axial Compress. [N/mm]	Axial Extension [N/mm]	Lateral [N/mm]	Angular [Nm/degr.]
40	-1 bar	+/-9	+/-4	+/-5	183	183	118	1,5
50	-1 bar	+/-9	+/-3	+/-5	185	185	215	2,3
65	-1 bar	+/-9	+/-3	+/-5	200	200	268	3,5
80	-1 bar	+/-10	+/-3	+/-5	217	217	502	5,5
100	-1 bar	+/-10	+/-2	+/-5	300	300	1398	12,
125	-0,95 bar	+/-11	+/-2	+/-5	390	390	2059	23
150	-0,95 bar	+/-11	+/-2	+/-5	530	530	5737	43
200	-0,9 bar	+/-12	+/-1,5	+/-5	707	707	9299	92
250	-0,79 bar	+/-14	+/-1,5	+/-5	896	896	14389	176
300	-0,65 bar	+/-17	+/-1,5	+/-5	792	792	15606	214

Combined Movements

- The max. movements (axial, lateral, angular) indicated in the tables are not independent movements. Avoid all torsion forces!
- The combined total of related movements must not exceed 100%.

Length Limitation

- Do not use limit bolts/sleeves to connect stainless steel-bellows to GAB Neumann heat exchangers.
- During pressure application and / or mechanical movement the extension must not exceed the max. allowed extension (as per data above).
- Please ensure that the heat exchanger and piping setup is adequately secured.

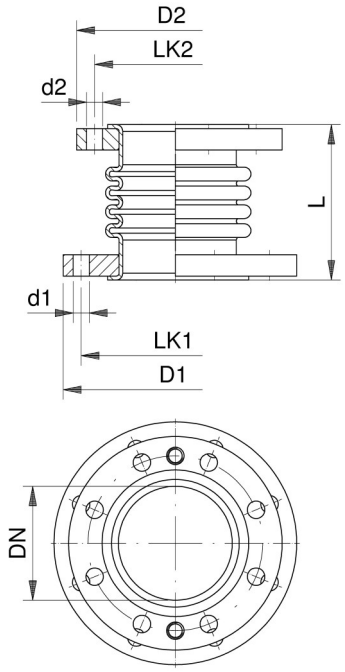

Spring Rate Correction Factors

Temperature [°C]	Factor
20	1,0
200	0,94

Examples:

- Spring rate at 200°C = spring rate at 20°C x 0,94
- Axial extension at DN 50 and 200°C by 5 mm: Force F = 5 mm x 185 N/mm x 0,94 = 878,75 N

Materials

Flange: 1.4571
Virgin, paste extruded PTFE, black, antistatic (max. resistance to earth < 10^8 Ohm

Estimated load cycles: 1000

GAB Neumann GmbH | Alemannenstrasse 29 | D-79689 Maulburg
T +49 (7622) 6751 0 | F +49 (7622) 6751 20 | info@gab-neumann.de

Graphite and SiC Heat Exchangers and Process Equipment

Stainless Steel Bellows with PTFE-lining (for projecting nozzles, DIN)

Pressure / Temperature Chart

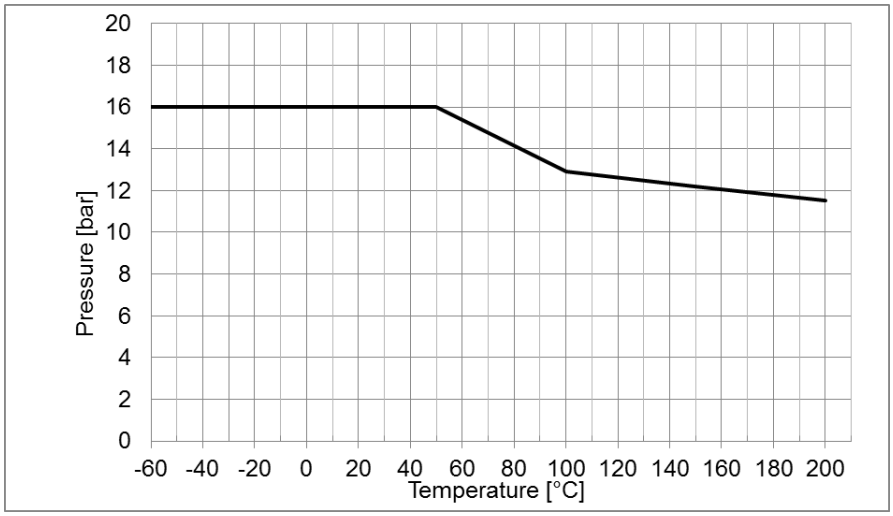

Diameter

DN40 - DN 150

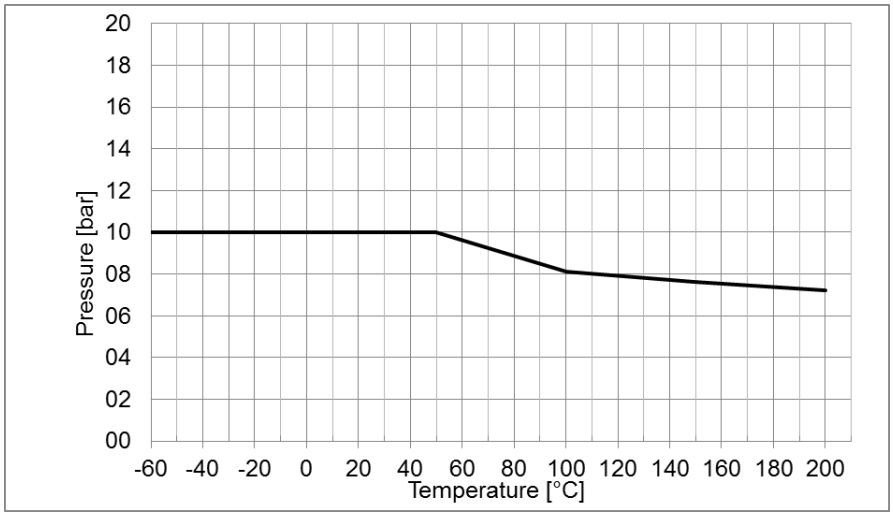

Diameter

DN 200 - DN 300

Vacuum / Temperature Chart

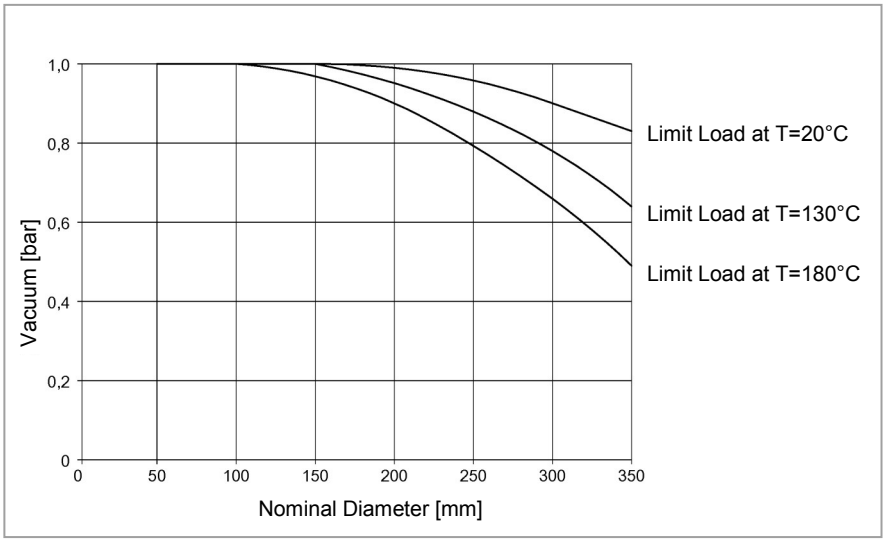

GAB Neumann GmbH | Alemannenstrasse 29 | D-79689 Maulburg
T +49 (7622) 6751 0 | F +49 (7622) 6751 20 | info@gab-neumann.de