Silicon Carbide Shell & Tube Heat Exchanger CORRESIC®-SR Series

Product Information (SR-1)

CORRESIC® - Silicon Carbide Shell & Tube Heat Exchanger

- Universally corrosion-resistant pressureless sintered SiC (SSiC) tube material with heat conductivity
- Resistant against all leaches, acids, solvents and halogens
- Non-leaking tube sheet sealing system with time-tested operational experience
- Construction materials as per application (carbon steel, stainless steel, glass-lined, PTFE-lined)

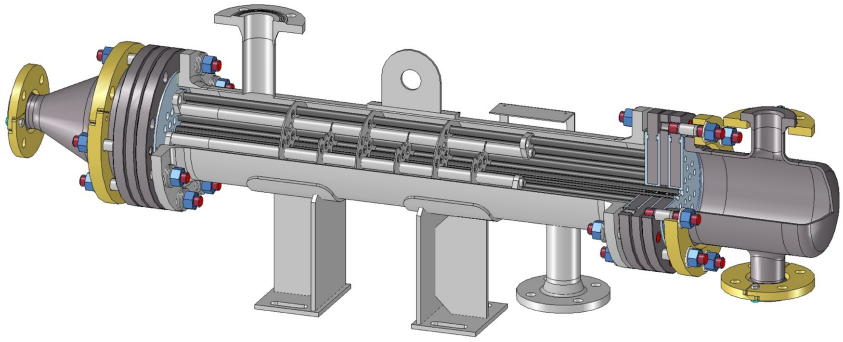

CORRESIC® -SR Shell & tube heat exchanger DN 200 (NPS 8) with 1.5 m (6“) bundle length

Setup and Design

- HEXOLOY SE®-SSiC tubes Ø14/19 mm (OD 0.55“ / ¾“)
- Tube sealing by patented compact sealing system
- Double sealing FFKM/FFKM resp. FFKM/FKM as standard
- No threaded connections of the tube sheets in corrosive areas
- Heat transfer area: 0.4 m² to 42 m² (4 to 450 ft²)
- Shell diameter: DN 100 to 400 (NPS 4 to 16)
- Bundle length: 1.0 to 4.5 m (39.4 to 177.2“)

Applications

- Liquid/liquid heat transfer of acids, caustic media and all kinds of organics, e.g. acid mixtures, sulphuric acid, nitric acid
- Condensation processes
- Condenser units including main and trap condenser and cooler
- Gas cooling with elementary halogen compounds (dry and moist)
- High purity chemical processes and final stage API manufacturing
- Acid concentration

Features and Benefits

Optimal corrosion resistance against acids, leaches, halogen compounds and oxidising media

Excellent thermal conductivity

Great abrasion resistance

High resistance against thermal shocks

Extremely pure, no contamination

Condensation on both, shell and tube side

Optimized tube sheet allows for low cost and compact design

Improved transfer area to shell volume relationship

Best available sealing system (double sealing FFKM resp. FKM)

No corrosion and leakage risk

Completely drainable

Design Parameters

-1/+10 bar (FV/145 psig)

-30/+220°C (-22/+428°F)

GAB Neumann GmbH | Alemannenstrasse 29 | D-79689 Maulburg
T +49 (7622) 6751 0 | F +49 (7622) 6751 20 | info@gab-neumann.de

Graphite and SiC Heat Exchangers and Process Equipment

Silicon Carbide Shell & Tube Heat Exchanger CORRESIC®-SR Series

Materials Used and Material Options

Tubes:	Pressureless sintered, single-phase α-silicon carbide (SSiC) SSiC tubes Ø14/19 mm (OD 0.55“ / ¾“)
Sealing system tube / tubesheet:	Double sealing FFKM/FFKM resp. FFKM/FKM
Tubesheet:	PFA-lined stainless steel
Shell:	Carbon steel, stainless steel, glass lined, glass, PTFE-lined steel
Headers:	Carbon steel, stainless steel, glass lined steel, PTFE-lined steel

Design and inspection

- CORRESIC® heat exchangers are designed, manufactured, tested and inspected according to the European PED or the ASME
- Other design and manufacturing codes available upon request

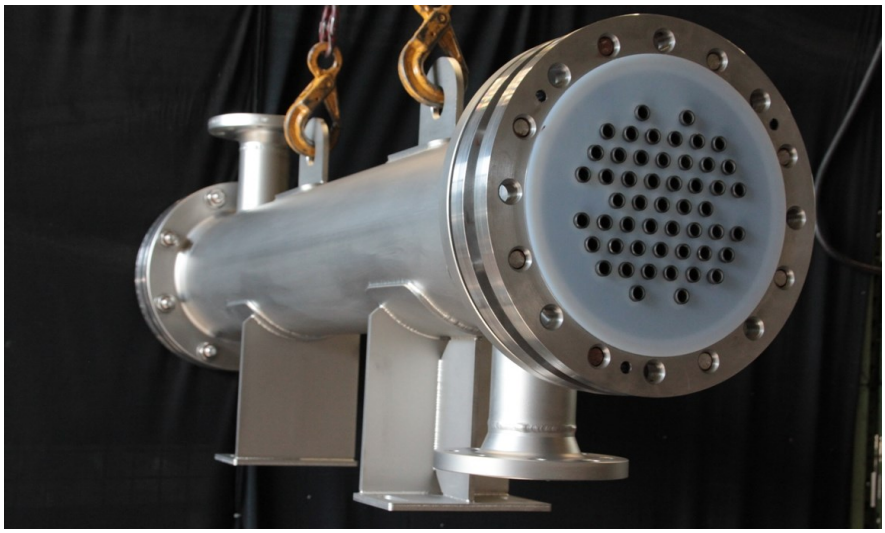

CORRESIC® SR shell & tube heat exchanger DN 200 (8“), 3 m² (32ft²)

Additional information

- Data sheet SR-1 includes information on terminology and main dimensions.
- Further developments and complementary information (brochures, corrosion resistance charts, product information, data sheets,…) are available for download at www.gab-neumann.de.

Benefits of Shell & Tube Design

Modular setup

Application-focused material choices

Great cleaning options

Technical Perfection

Application in single-purpose and multi-purpose plants

Optimal thermal performance at compact dimensions

Long lifetime

Economically Outstanding

Standardization with a focus on major sizes and material combinations

Short lead times

Low operation and maintenance costs

Competitive pricing

GAB Neumann GmbH | Alemannenstrasse 29 | D-79689 Maulburg
T +49 (7622) 6751 0 | F +49 (7622) 6751 20 | info@gab-neumann.de

50 YEARS 1965 2015 GAB neumann

Graphite and SiC Heat Exchangers and Process Equipment