Silicon Carbide Block Heat Exchanger CORRESIC®-SE Series

CORRESIC®-Silicon Carbide Block Heat Exchanger

- Universally corrosion-resistant block material pressureless sintered SiC (SSiC) with very high thermal conductivity
- Resistant against all leaches, acids, solvents and halogens
- Robust, modular design ensuring long lifetime and low maintenance cost
- Especially applicable for steam heated evaporation or heating processes
- Various installation modes possible (vertical, horizontal, inclined)

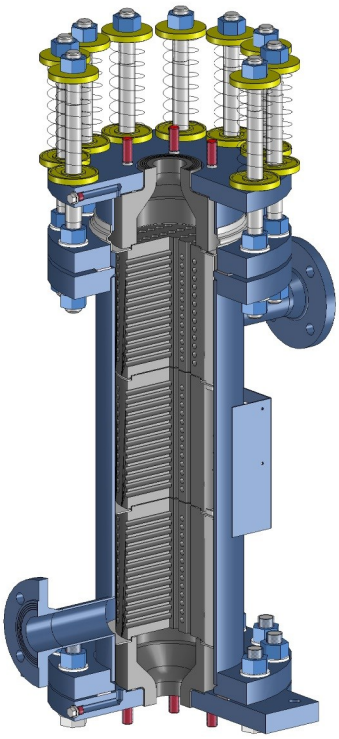

CORRESIC®-SE block heat exchanger (sectional view)

Design

- Monolithic blocks and headers made of SSiC material for optimized corrosion resistance
- Modular design with PTFE gaskets and PTFE or stainless steel baffles
- Steel shell with axial compensator for thermal dilatation
- Helical springs for sustainable sealing forces throughout the total range of operation
- Heat transfer area: 0.3 - 20 m² (3 - 215 ft”)
- Block diameter: 160, 260, 350 mm (6“, 10“, 14“)

Applications

- Liquid/liquid heat exchange for all acids, leaches and organic solvents, e.g. mixed acid, sulphuric acid, nitric acid
- Reboiler evaporation, especially steam-heated
- Condensation processes with special robustness needs
- Pickling applications in steel and galvanic industries (heating, cooling, acid regeneration)
- Acid concentration processes

Features

Optimal corrosion resistance

Robust and modular design

Abrasion resistance

Especially applicable in steam-heated processes

No product contamination

Low-maintenance

High operational reliability in robust applications

Design Parameters

-1/+10 bar (FV/145 psig) max. allowable pressure

-60/+220°C (-76/428°F) max. allowable temperature

Other values upon request.

GAB Neumann GmbH | Alemannenstrasse 29 | D-79689 Maulburg
T +49 (7622) 6751 0 | F +49 (7622) 6751 20 | info@gab-neumann.de

Graphite and SiC Heat Exchangers and Process Equipment

Silicon Carbide Block Heat Exchanger CORRESIC®-SE Series

Materials Used and Material Options

Blocks:	Pressureless sintered, single-phase, alpha silicon carbide (SSiC)
Headers:	Pressureless sintered, single-phase, alpha silicon carbide (SSiC)
Gaskets:	PTFE
Baffles:	PTFE, stainless steel
Shell:	Carbon steel, stainless steel

Design and Inspection

- CORRESIC® heat exchangers are designed, manufactured, tested and inspected in accordance with AD 2000-Merkblatt (in compliance with the European Pressure Equipment Directive, PED)
- Other design and manufacturing codes available upon request

Block CORRESIC®-SE with 160 mm diameter

Additional Information

- Data sheet SE-1 includes information on terminology and main dimensions.
- Further developments and complementary information (brochures, corrosion resistance charts, product information, data sheets,…) are available for download at www.gab-neumann.de.

Benefits

Modular setup

Robust design

Easy cleaning

Low maintenance cost

Technical Perfection

Application in single-purpose and multi-purpose plants

Optimal thermal performance at compact dimensions

Small overall size

Long lifetime

Cost Effective

Competitive pricing

Standardization

Focus on major sizes and material combinations

Short lead times

Low operation and maintenance costs

GAB Neumann GmbH | Alemannenstrasse 29 | D-79689 Maulburg
T +49 (7622) 6751 0 | F +49 (7622) 6751 20 | info@gab-neumann.de

Graphite and SiC Heat Exchangers and Process Equipment