WS 1080

Stainless Steel Bellows
(for projecting graphite nozzles DIN)

Works Standard

Main Dimensions and Characteristics

DN	Neutral Length [mm]	Effective Area [cm²]	Flange Connection D1 [mm]	LK1 [mm]	d1 [mm]	D2 [mm]	LK2 [mm]	d2 [mm]
25	79	8,0	150	110	4xØ18	115	85	4xØ14
40	80	30	165	125	4xØ18	150	110	4xØ18
50	90	44	185	145	8xØ18	165	125	4xØ18
65	95	67	200	160	8xØ18	185	145	8xØ18
80	95	87	220	180	8xØ18	200	160	8xØ18
100	100	137	250	210	8xØ18	220	180	8xØ18
125	115	198	285	240	8xØ22	250	210	8xØ18

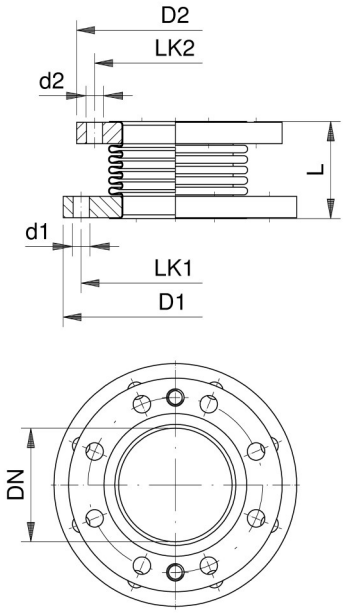

DN	Full Vacuum Performance [up to …°C]	Movements Length min,/max. [mm]	lateral max. [mm]	angular max. [degree]	Spring Rate (+/- 30% at 20°C) Axial Compress. [N/mm]	Axial Extension [N/mm]	lateral [N/mm]	angular [Nm/degr.]
25	200	+/-13	+/-1	+/-1	24	24	21	0,08
40	200	+/-9	+/-2	+/-2,5	107	107	195	0,7
50	200	+/-11	+/-2,5	+/-2,5	95	95	219	0,9
65	200	+/-13	+/-1,5	+/-1	83	83	236	1,25
80	200	+/-12	+/-2	+/-3	140	140	621	3
100	200	+/-16	+/-2,5	+/-3	124	124	688	4
125	200	+/-20	+/-3	+/-5	148	148	1088	8

Spring Rate Correction Factors

Temperature [°C]	Factor
20	1,0
200	0,94

Examples:

- Spring rate at 200°C = spring rate at 20°C x 0,94
- Axial extension at DN 50 and 200°C by 5 mm: Force F = 5 mm x 95 N/mm x 0,94 = 446,5 N

Combined Movements

- The max. movements (axial, lateral, angular) indicated in the tables are not independent movements. Avoid all torsion forces!
- The combined total of related movements must not exceed 100%.

Length Limitation

- Do not use limit bolts/sleeves to connect stainless steel bellows to GAB Neumann heat exchangers.
- During pressure application and / or mechanical movement the extension must not exceed the max. allowed extension (as per data above).
- Please ensure that the heat exchanger and piping setup is adequately secured.

Materials

Flange: 1.4571
Bellows: 1.4571

Estimated load cycles: 1000

GAB Neumann GmbH | Alemannenstrasse 29 | D-79689 Maulburg
T +49 (7622) 6751 0 | F +49 (7622) 6751 20 | info@gab-neumann.de

Graphite and SiC Heat Exchangers and Process Equipment

Stainless Steel Bellows
(for projecting graphite nozzles DIN)

Pressure / Temperature Chart

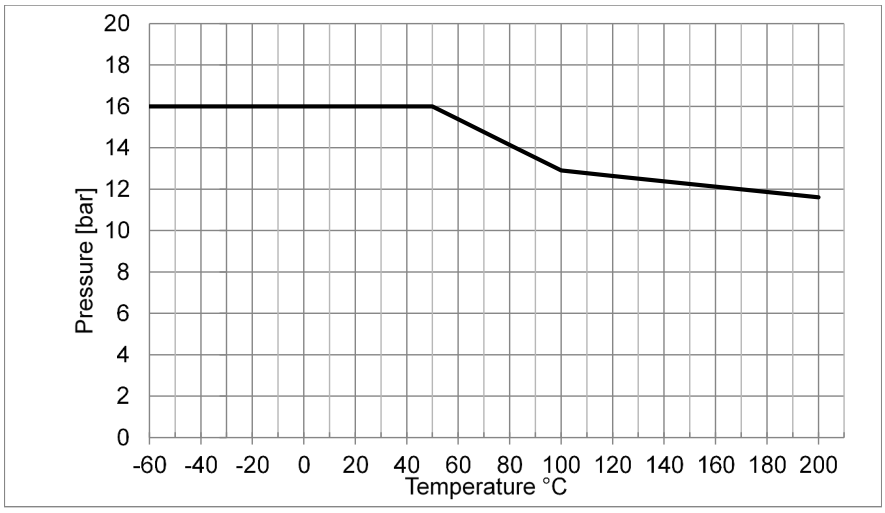

All Diameter

GAB Neumann GmbH | Alemannenstrasse 29 | D-79689 Maulburg
T +49 (7622) 6751 0 | F +49 (7622) 6751 20 | info@gab-neumann.de