Base Plate for Block Heat Exchanger

Works Standard

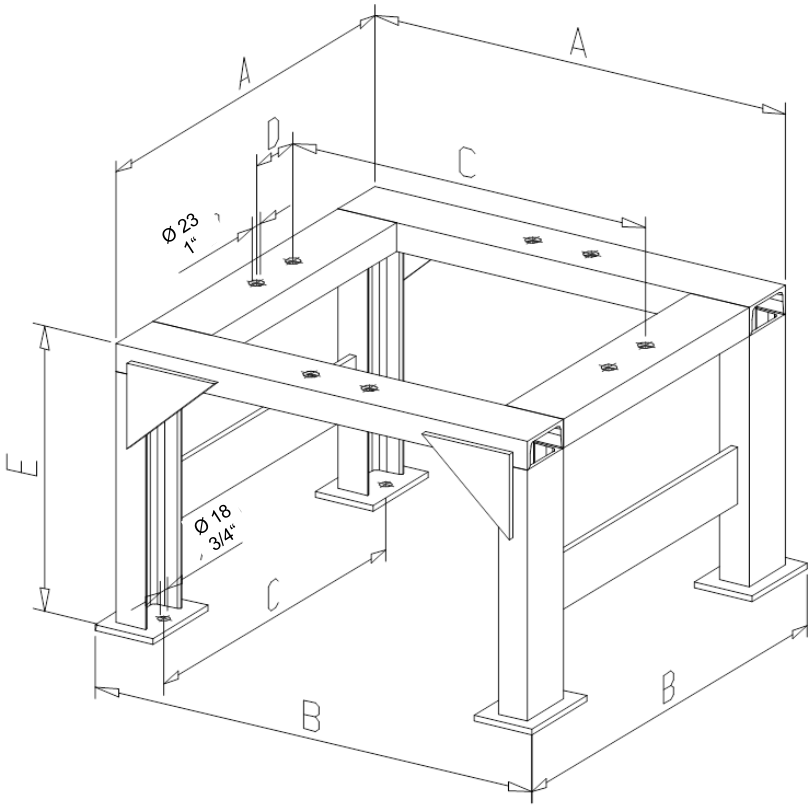

Surface treatment:

Sand blasting

Prime coat:	2 comp. epoxy resin zinc
Intermediate coat:	2 comp. epoxy resin iron mica
Top coat:	2 comp. polyurethane
Total film thickness:	> 180 µm / 7 mils

Block Type	Main Dimensions				
	A [mm]	B [mm]	C [mm]	D [mm]	E [mm]
GAB 1	415	460	350	100	500
GAB 2	550	595	485	100	500
GAB 3	705	755	605	100	500
GAB 4	940	990	840	120	500
GAB 5	1045	1095	945	120	500

GAB Neumann GmbH | Alemannenstrasse 29 | D-79689 Maulburg
T +49 (7622) 6751 0 | F +49 (7622) 6751 20 | info@gab-neumann.de

50 YEARS 1965 2015 GAB neumann

Graphite and SiC Heat Exchangers
and Process Equipment

Base Plate for Block Heat Exchanger

Block Type	Main Dimensions				
	A [inch]	B [inch]	C [inch]	D [inch]	E [inch]
GAB 1	16	18	14	4	20
GAB 2	22	23	19	4	20
GAB 3	28	30	24	4	20
GAB 4	37	39	33	5	20
GAB 5	41	43	37	5	20

GAB Neumann GmbH | Alemannenstrasse 29 | D-79689 Maulburg
T +49 (7622) 6751 0 | F +49 (7622) 6751 20 | info@gab-neumann.de