WS 1042

Annular Groove Heat Exchanger
Vertical Installation - Support Collar Mounting

Works Standard

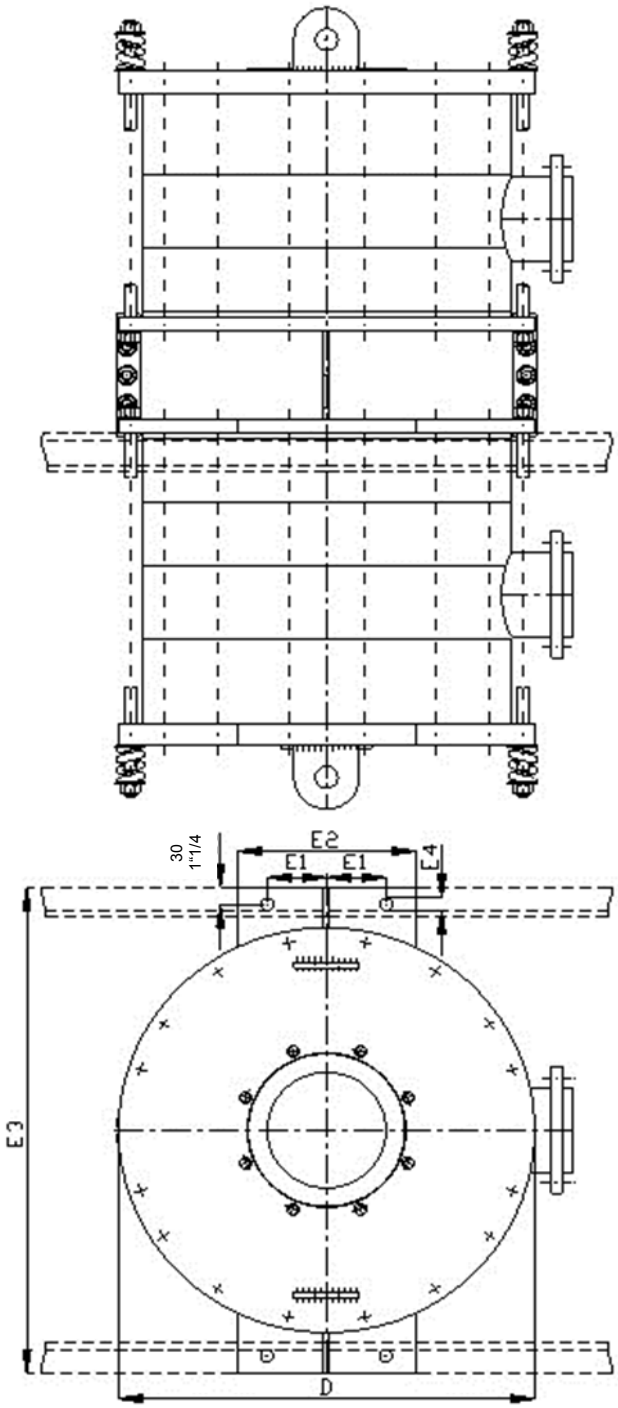

E.g.: KB Series

D [mm]	E1 [mm]	E2 [mm]	E3 [mm]	E4[mm]
730	100	300	840	2xØ22
630	100	300	740	2xØ22
530	75	200	640	2xØ22

D [inch]	E1 [inch]	E2 [inch]	E3 [inch]	E4 [inch]
29“	4	12	33“	2xØ7/8”
25“	4	12	29“	2xØ7/8”
21“	3	8	25“	2xØ7/8”

GAB Neumann GmbH | Alemannenstrasse 29 | D-79689 Maulburg
T +49 (7622) 6751 0 | F +49 (7622) 6751 20 | info@gab-neumann.de

Graphite and SiC Heat Exchangers
and Process Equipment