Annular Groove Heat Exchanger
Vertical Installation - Extended Endplate

Works Standard

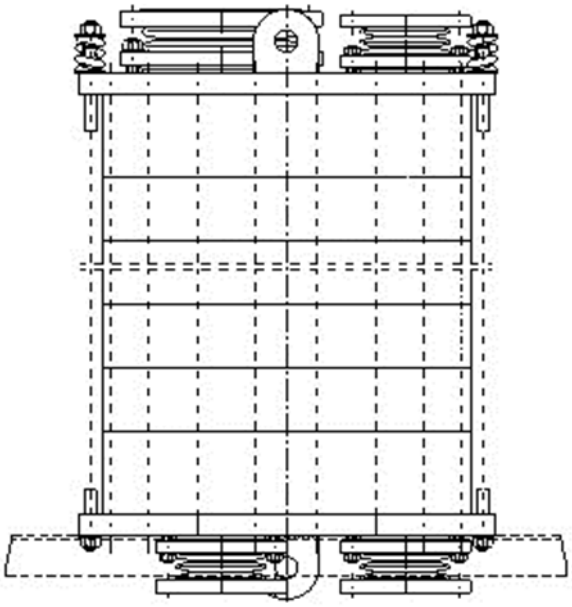

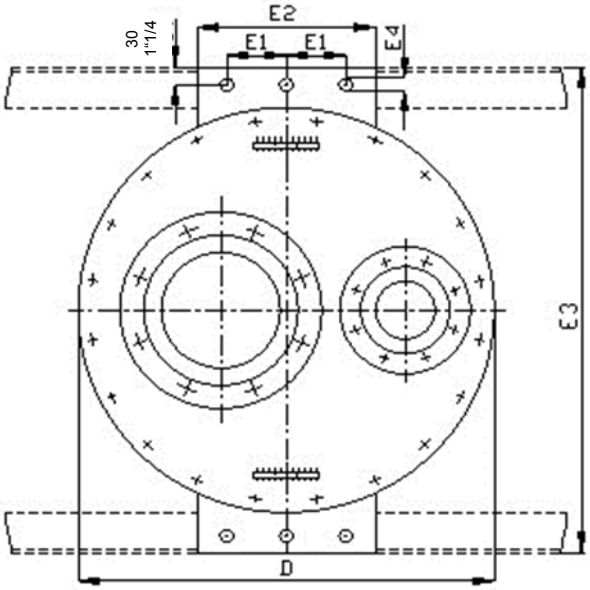

E.g.: NB Series

D [mm]	E1 [mm]	E2 [mm]	E3 [mm]	E4 [mm]
700	100	300	840	3xØ22
600	100	300	740	3xØ22
500	75	200	640	2xØ22

D [inch]	E1 [inch]	E2 [inch]	E3 [inch]	E4 [inch]
28“	4	12	33“	3xØ7/8”
24“	4	12	29“	3xØ7/8”
20“	3	8	25“	2xØ7/8”

GAB Neumann GmbH | Alemannenstrasse 29 | D-79689 Maulburg
T +49 (7622) 6751 0 | F +49 (7622) 6751 20 | info@gab-neumann.de

Graphite and SiC Heat Exchangers
and Process Equipment