Perspiration Water Drain Duct

Drops of unknown origin and composition are cause for alarm in any chemistry plant!

The reason could be non-hazardous, e.g. perspiration water of an uninsulated heat exchanger, which should be cooled with cold brine or cold water on humid days.

It takes time to identify the cause as tension mounts.

The best way to proceed is by collecting perspiration water from the equipment, and then channelling it into the water drain duct of the annular groove heat exchanger.

Vertical heat exchanger performance

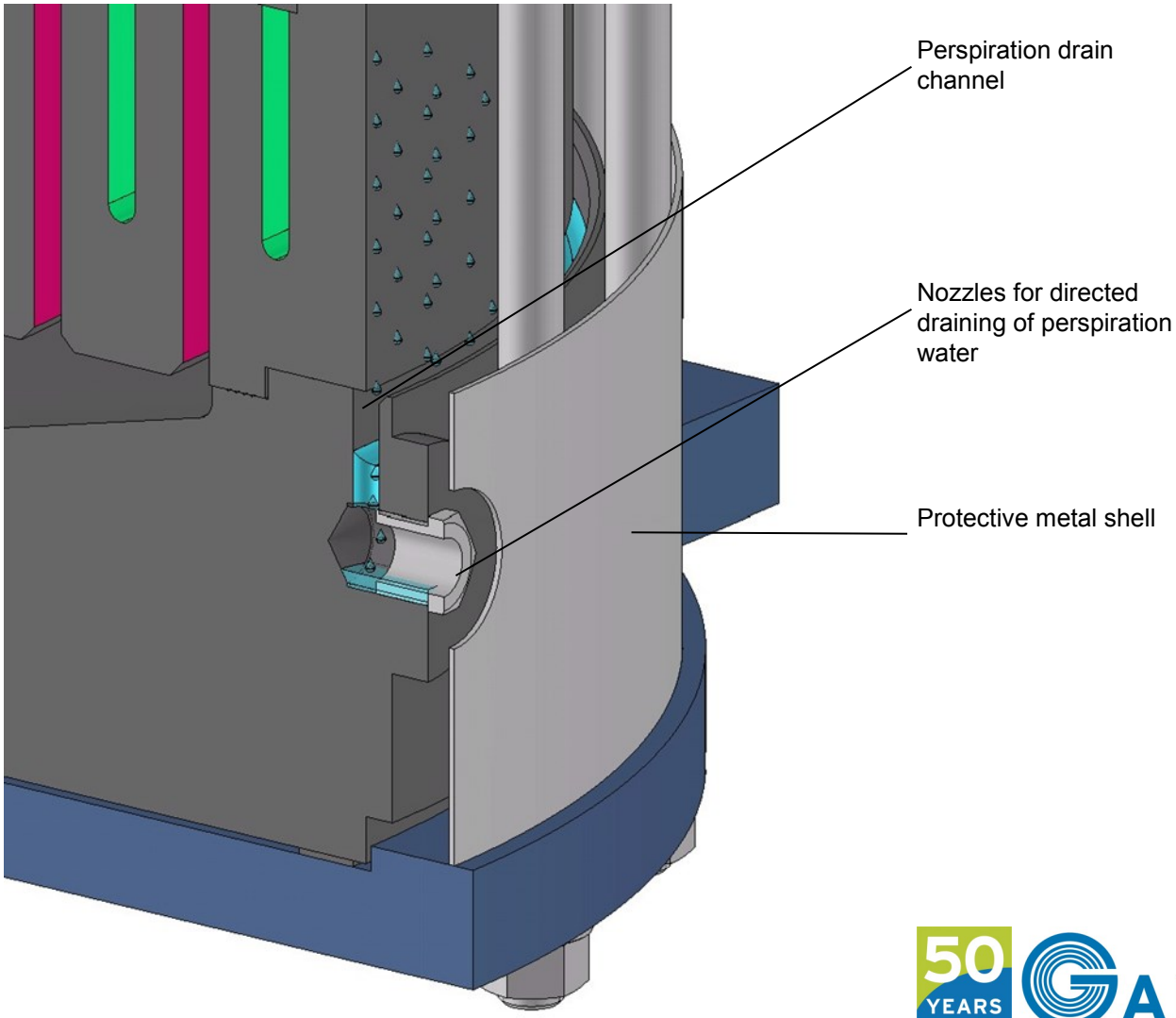

Perspiration Water Drain Duct

Horizontal heat exchanger performance

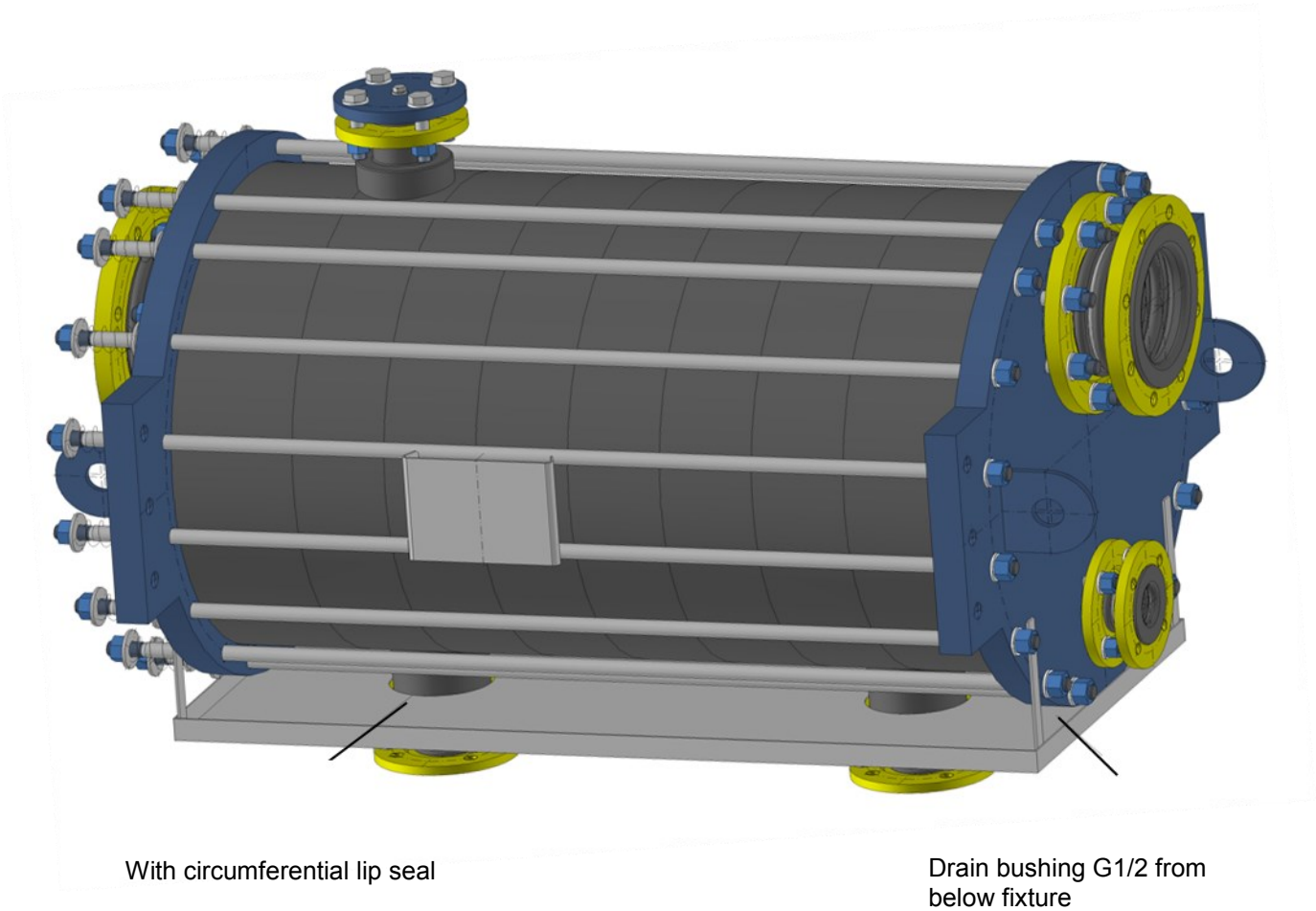

With circumferential lip seal

Drain bushing G1/2 from below fixture

GAB Neumann GmbH | Alemannenstrasse 29 | D-79689 Maulburg
T +49 (7622) 6751 0 | F +49 (7622) 6751 20 | info@gab-neumann.de

Graphite and SiC Heat Exchangers and Process Equipment