Connecting to Glass Piping

1. Connecting directly to the graphite nozzle

If glass piping will be connected to graphite heat exchangers directly (without PTFE bellows), different pitch circles, bore diameters and screw numbers are generally needed.

Therefore we recommend using flanges with reduced hole diameters on the glass side in compliance with DIN 2501 PN 10 (to prevent exceeding the force recommended for glass parts).

On the graphite nozzle side, the thread holes of the steel plate are reduced using hexagonal adapters in compliance with DIN 2501 PN 10. Then the suitable stud-bolts can be inserted above the flanges.

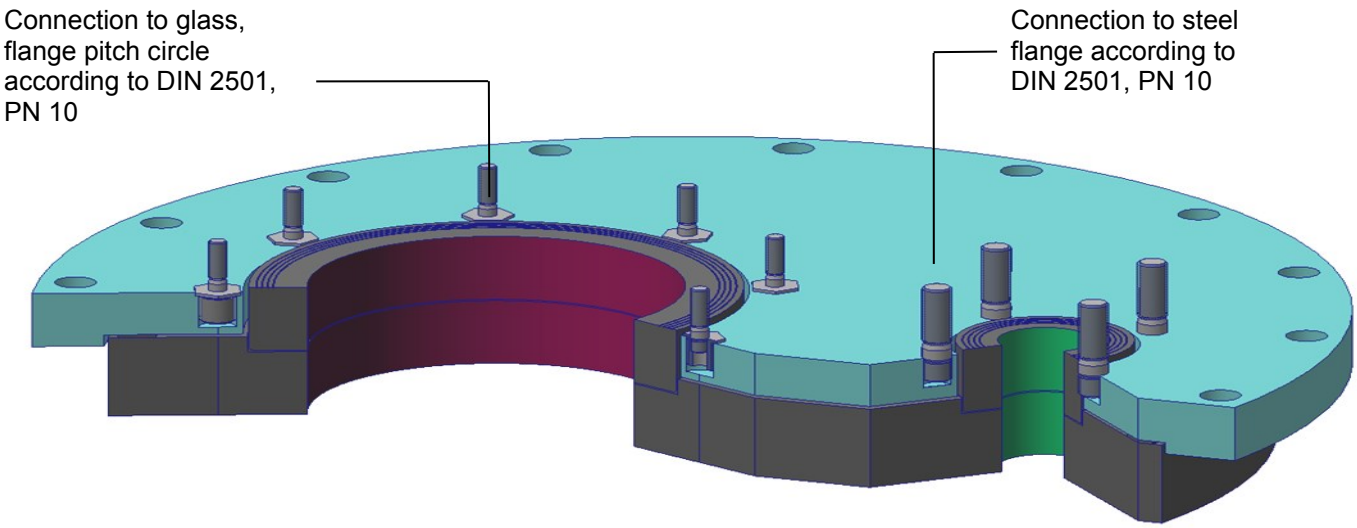

Note:

Pressure testing for heat exchanger is usually performed with regular stud-bolts.
After successful testing, these are replaced with the reduced stud-bolts for glass piping

GAB Neumann GmbH | Alemannenstrasse 29 | D-79689 Maulburg
T +49 (7622) 6751 0 | F +49 (7622) 6751 20 | info@gab-neumann.de

Graphite and SiC Heat Exchangers and Process Equipment

Connecting to Glass Piping

2. Connecting to PTFE bellows

The same main procedure (see overleaf) is applied when connecting glass piping to PTFE bellows (according to GAB works standards 1070 or 1270). The thread holes of the loose flange are reduced by inserting hexagonal adapters on the pipe side.

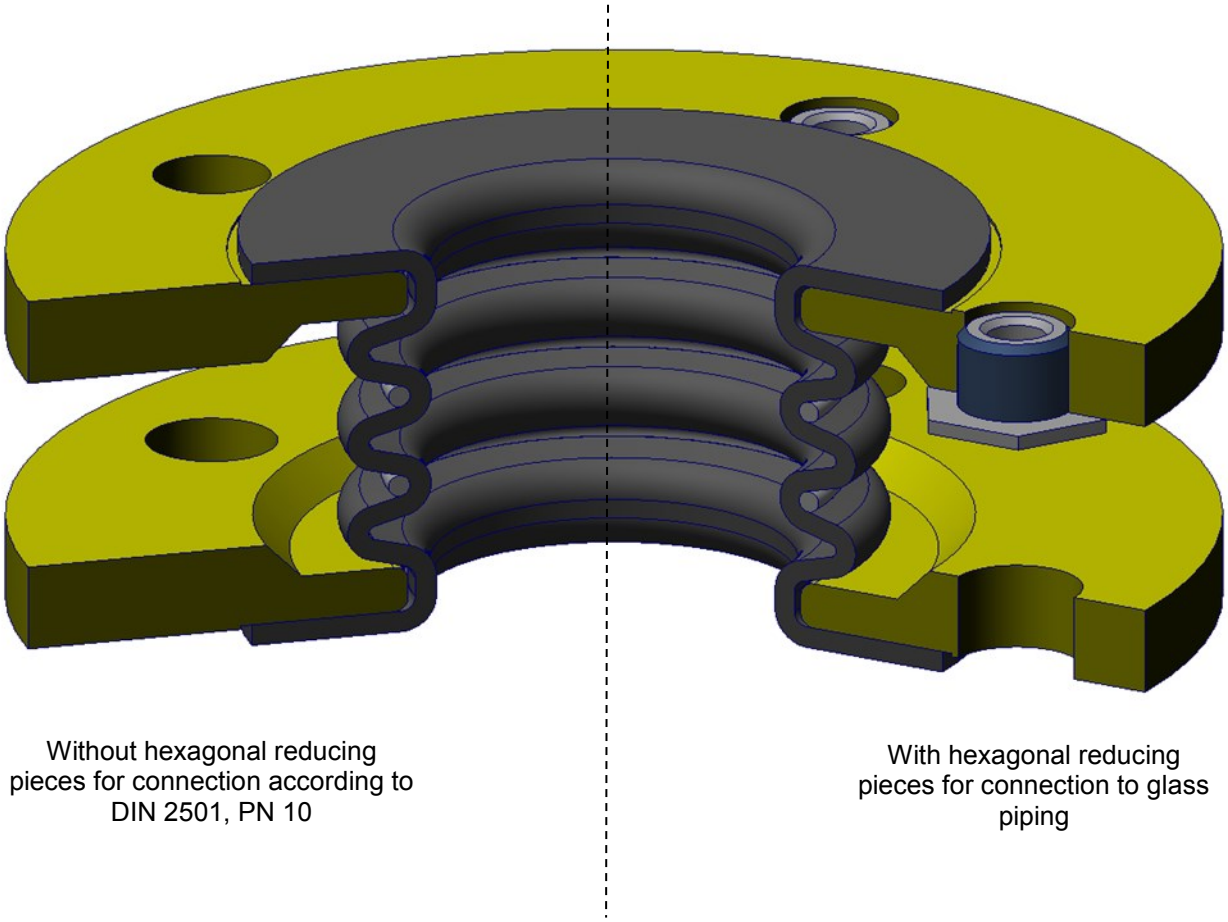

Without hexagonal reducing pieces for connection according to DIN 2501, PN 10

With hexagonal reducing pieces for connection to glass piping

GAB Neumann GmbH | Alemannenstrasse 29 | D-79689 Maulburg
T +49 (7622) 6751 0 | F +49 (7622) 6751 20 | info@gab-neumann.de