Easy Mechanical Cleaning of Block Heat Exchangers

Technical Information

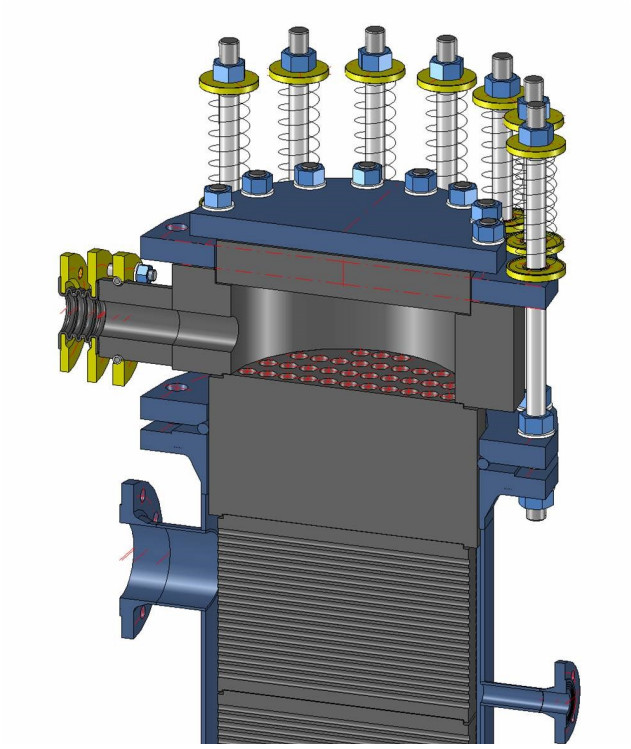

When block heat exchangers operate under strong scaling conditions, we offer a special design for cleaning the unit without disconnecting the process piping:

The standard header is replaced by a header with a special side nozzle that serves as an inlet (outlet) of the process medium. The top plate can be removed to allow for access to all process bores. Process inlet and outlet pipes remain fitted.

Cleaning can be carried out using a stream jet or suitable brush.

GAB Neumann GmbH | Alemannenstrasse 29 | D-79689 Maulburg
T +49 (7622) 6751 0 | F +49 (7622) 6751 20 | info@gab-neumann.de

Graphite and SiC Heat Exchangers and Process Equipment